CRS60

Circular EI60S fire damper for surface and remote mounting

CE 0749

Rf-Technologies nv • Lange Ambachtstraat 40 • 9860 Oosterzele • Belgium • Tel +32 9 362 31 71 • info@rft.eu

www.rft.eu

C16-EN-C 02/2023

Table of content

Explanation of the abbreviations and pictograms

Wn = nominal width
Hn = nominal height
Dn = nominal diameter
E = integrity
I = thermal insulation
S = smoke leakage
Pa = pascal
ve = vertical wall penetration
ho = horizontal floor penetration
o -> i = meets the criteria from the outside (o) to the inside (i)
i <-> o = fire side not important
V AC = Volt alternating current
V DC = Volt direct current

E.TELE = power supply magnet
E.ALIM = power supply motor
V = volt
W = watt
Auto = automatic
Tele = remote controlled
Pnom = nominal capacity
Pmax = maximum capacity
GKB (type A) / GKF (type F): "GKB" stands for standard plasterboards (type A according to EN 520) while "GKF" plasterboards offer a higher fire resistance for a similar plate thickness (type F according to EN 520)
Cal-Sil = calcium silicate

OP = option (delivered with the product)
KIT = kit (delivered separately for repair or upgrade)
PG = connection flange to the duct
Sn = free air passage
ζ [-] = pressure loss coefficient
Q = airflow
ΔP = static pressure drop
v = air speed in the duct
Lwa = A-weighted sound power level
Lw oct = sound power level per octave midband
dB(A) = A-weighted decibel value
ΔL = correction factor

	optimal acoustic performance		optimal free air passage and minimal pressure loss
EN 1751 C	air-tightness class C according to EN1751		suitable for installation remote from the wall

DECLARATION OF PERFORMANCE

CE_DoP_Rf-t_C16_EN D-03/2023

1. Unique identification code of the product-type:	**CRS60**
2. Intended use/es:	Circular fire damper to be used in conjunction with partitions to maintain fire compartments in heating, ventilating and air conditioning installations.
3. Manufacturer:	Rf-Technologies NV, Lange Ambachtstraat 40, B-9860 Oosterzele
4. System/s of AVCP:	System 1
5. Harmonised standard / European Assessment Document; notified body / European Technical Assessment, Technical Assessment Body, notified body; certificate of constancy of performance:	EN 15650:2010, BCCA with identification number 0749; requested
6. Declared performance according to EN 15650:2010	(Fire resistance according to EN 1366-2 and classifications according to EN 13501-3)

Essential characteristics					Performance	
Range	**Wall type**	**Wall**	**Sealing**	**Installation**	**Classification**	
Ø 100-630 mm	Rigid wall	Aerated concrete ≥ 100 mm	Fire resistant acrylic sealant	1	EI 60 (v_e i ↔ o) S - (300 Pa)	Harmonised standard EN 15650:2010
			Fire resistant acrylic sealant	2	EI 60 (v_e i ↔ o) S - (300 Pa)	
			Stone wool + coating with acrylic sealant	3	EI 60 (v_e i ↔ o) S - (300 Pa)	
			Stone wool + coating with acrylic sealant	2	EI 60 (v_e i ↔ o) S - (300 Pa)	
	Rigid floor	Aerated concrete ≥ 100 mm	Fire resistant acrylic sealant	1	EI 60 (h_o i ↔ o) S - (300 Pa)	
			Fire resistant acrylic sealant	2	EI 60 (h_o i ↔ o) S - (300 Pa)	
			Stone wool + coating with acrylic sealant	3	EI 60 (h_o i ↔ o) S - (300 Pa)	
			Stone wool + coating with acrylic sealant	2	EI 60 (h_o i ↔ o) S - (300 Pa)	
	Flexible wall	Metal studs gypsum plasterboard Type A (EN 520) ≥ 100 mm	Fire resistant acrylic sealant	1	EI 60 (v_e i ↔ o) S - (300 Pa)	
			Fire resistant acrylic sealant	2	EI 60 (v_e i ↔ o) S - (300 Pa)	
			Stone wool + coating with acrylic sealant	3	EI 60 (v_e i ↔ o) S - (300 Pa)	
			Stone wool + coating with acrylic sealant	2	EI 60 (v_e i ↔ o) S - (300 Pa)	
	Asymmetrical flexible wall (shaft wall)	Metal studs gypsum plasterboard Type F (EN 520) ≥ 80 mm	Fire resistant acrylic sealant	3	EI 60 (v_e i ↔ o) S - (300 Pa)	
			Fire resistant acrylic sealant	2	EI 60 (v_e i ↔ o) S - (300 Pa)	

1	Type of installation: surface-mounted, 0-360° (300 Pa). Minimal distances authorised.	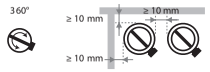	2	Type of installation: remote from the wall, 0-360°	
3	Type of installation: surface-mounted, 0-360° (300 Pa)				

Nominal activation conditions/sensitivity:	Pass
Response delay (response time): closure time	Pass
Operational reliability: cycling	ONE - 10000 cycles; BFL(T) - 10000 cycles; BFN(T) - 10000 cycles; BFLT-SR - 20000 cycles; BFNT-SR - 20000 cycles
Durability of response delay:	Pass
Durability of operational reliability:	Pass
Protection against corrosion according to EN 60068-2-52:	Pass
Damper casing leakage according to EN 1751:	≥ class C

The performance of the product identified above is in conformity with the set of declared performance/s. This declaration of performance is issued, in accordance with Regulation (EU) No 305/2011, under the sole responsibility of the manufacturer identified above.

Signed for and on behalf of the manufacturer by:
Mathieu Steenland, Technical Manager

Oosterzele, 03/2023

Product presentation CRS60

Product presentation CRS60

Circular fire damper with a fire resistance of up to 60 minutes. The damper collar and short damper tunnel guarantee quick and easy mounting, both in surface and remote mounting. The optimised design of this fire damper ensures excellent aeraulic and acoustic performance. Available in diameters 100-630 mm.

Fire dampers are installed where air ducts penetrate fire-resistant compartment walls. Their role is to restore the fire resistance grade of the penetrated wall and to prevent smoke propagation. Fire dampers are distinguished by their degree of fire resistance, by their aeraulic properties as well as by their installation ease. Rf-Technologies' fire dampers are all CE marked. They can be equipped with various types of mechanisms depending on the specific needs linked to the project or to the local regulations.

- ☑ easy to install
- ☑ optimal free air passage and minimal pressure loss
- ☑ optimal acoustic performance
- ☑ air-tightness class C according to EN1751

- suitable for surface-mount in rigid wall/floor, light wall and shaft wall (metal stud gypsum plasterboard wall)
- minimal distance allowed
- suitable for installation remote from the wall or floor
- tested according to EN 1366-2 up to 300 Pa
- maintenance-free
- for indoor use
- operating temperature: max. 50°C

1. casing in galvanised steel
2. damper blade
3. operating mechanism
4. rubber sealing ring
5. sealing ring for damper blade
6. collar
7. intumescent strip
8. fixation plate

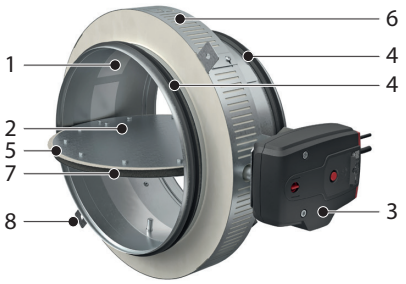

Range and dimensions CRS60

ØDn [mm]	100	125	160	200	250	315	400	500	630

Exceeding blade: X = on the mechanism side, Y = on the wall side

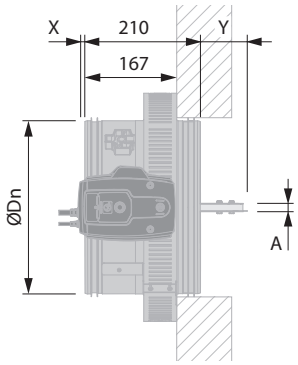

ØDn [mm]	100	125	160	200	250	315	400	500	630
X	-	-	-	-	-	23	66	116	181
Y	-	-	10	30	55	88	130	180	245
A	15	15	15	15	15	15	27	27	27

	ONE	BFL(T)	BFN(T)
P	140	121	125
Q	136	80	98
Z	75	40	50

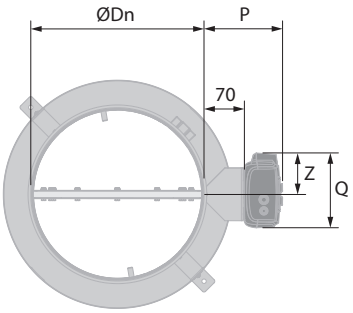

Evolution - kits

	**KITS ONE T 24 FDCU L**	Spring return actuator ONE 24V (with fusible link T) + unipolar beginning- and end-of-range switch
	**KITS ONE T 230 FDCU L**	Spring return actuator ONE 230V (with fusible link T) + unipolar beginning- and end-of-range switch
	**KITS BFLT24**	Spring return actuator BFL 24V with thermo-electric fuse (T)
	**KITS BFLT24-ST**	Spring return actuator BFL 24V with thermo-electric fuse (T) and plug (ST)
	**KITS BFLT230**	Spring return actuator BFL 230V with thermo-electric fuse (T)
	**KITS BFLT230-ST**	Spring return actuator BFL 230V with thermo-electric fuse (T)
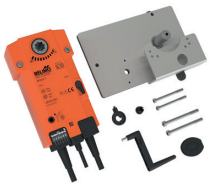	**KITS BFNT24**	Spring return actuator BFN 24V with thermo-electric fuse (T)
	**KITS BFNT24-ST**	Spring return actuator BFN 24V with thermo-electric fuse (T) and plug (ST)
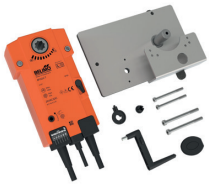	**KITS BFNT230**	Spring return actuator BFN 230V with thermo-electric fuse (T)

Evolution - kit

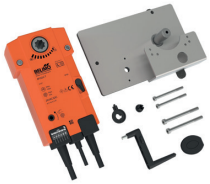	**KITS BFNT230-ST**	Spring return actuator BFN 230V with thermo-electric fuse (T)
	**KITS SN2 BFL/BFN**	Auxiliary limit switch 'open/closed'
	**KITS ZBAT 72**	Black spare part for thermo-electric fuse for BFLT/BFNT
	**FUS72 ONE L**	Fusible link 72°C
	**MECT**	Testbox for mechanisms 24/48 V (magnet, motor, beginning and end of range switches)

Storage and handling

As this product is a safety element, it should be stored and handled with care.

Avoid:

- any kind of impact or damage
- contact with water
- deformation of the casing

It is recommended:

- to unload in a dry area
- not to flip or roll the product to move it
- not to use the damper as a scaffold, working table, etc.
- not to store smaller dampers inside larger ones

Installation

General points

- The installation must comply with the installation manual and the classification report.
- Axis orientation: see the declaration of performance.
- Avoid obstruction of adjoining ducts.
- Product installation: always with closed damper blade.
- Verify if the blade can move freely.
- Please observe safety distances with respect to other construction elements. The operating mechanism must also remain accessible: allow for a clearance of 200 mm around the housing.
- The air tightness class will be maintained if the damper is installed according to the installation manual.
- Rf-t fire dampers are always tested in standardised constructions according to EN 1366-2. The achieved results are valid for similar supporting constructions with a fire resistance, thickness and density equal or superior to the supporting construction used during the test.
- The damper must remain accessible for inspection and maintenance.
- Schedule at least 2 visual checks each year.

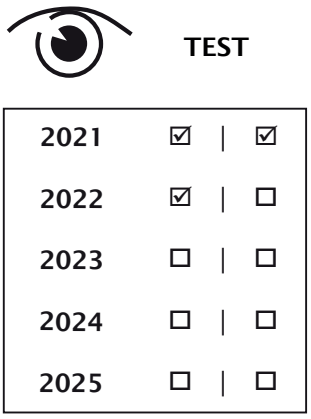

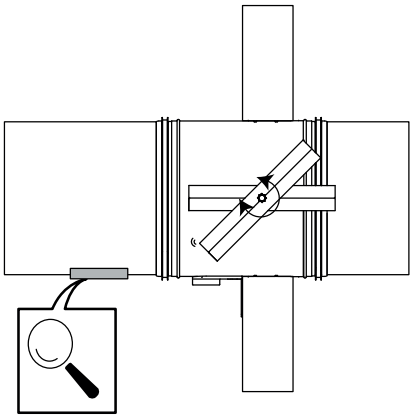

Product specific

- On one side of the fire damper, the surface-mounted collar acts as a stop for the air duct. On the other side, the stop for the duct is formed by the ends of the fixing plates and the mechanism bridge.
- It is not required to fix the duct to the fire damper with screws, but it is allowed. The screws may be inserted through the rubber sealing ring.
- Diameter 100 to 315 has 2 fixation plates. Diameter 400 to 630 has 4 fixation plates.

Installation at a minimal distance from another damper or from an adjacent supporting construction

1

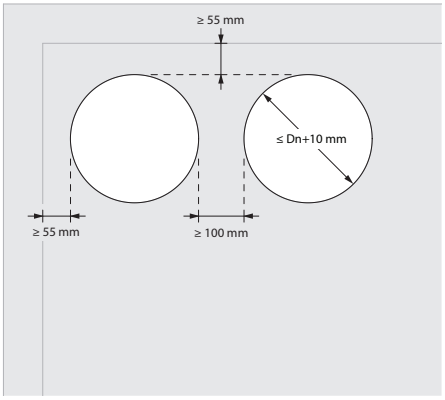

1. Principle
According to the European test standard, a fire damper must be installed at a minimum distance of 75 mm from an adjacent wall and 200 mm from another damper, unless the solution was tested at a shorter distance.
This Rf-Technologies fire damper has been successfully tested and may be installed at a shorter distance than the minimum specified by the standard in the following installation situations:

- Installation in rigid wall - sealing with acrylic sealant
- Installation in flexible wall (metal stud gypsum plasterboard wall) - sealing with acrylic sealant
- Installation in rigid floor - sealing with acrylic sealant

2

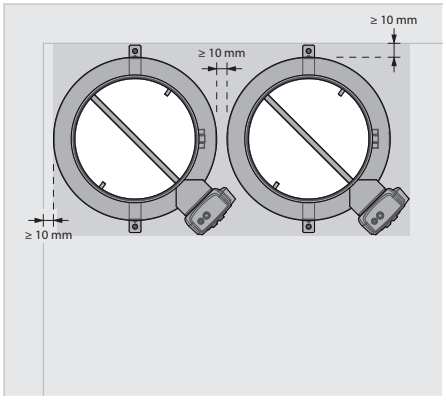

2. Restrictions
A maximum of 2 dampers may be installed next to each other at a minimum distance from wall and/or ceiling/floor.

Installation in rigid wall - sealing with acrylic sealant

1

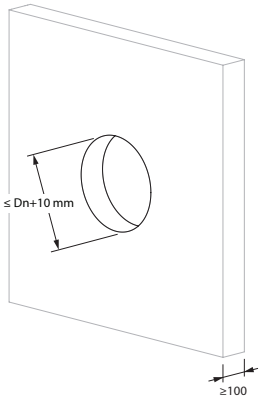

2

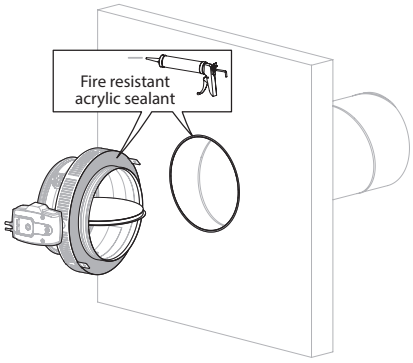

3

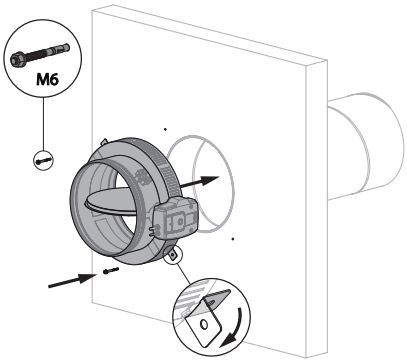

4

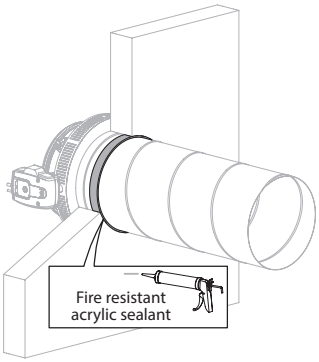

Installation in rigid wall - sealing with stone wool

1

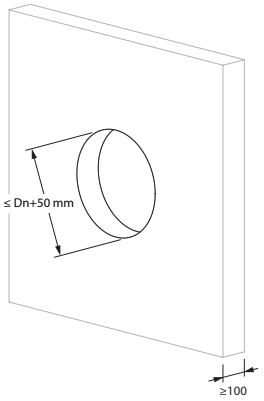

2

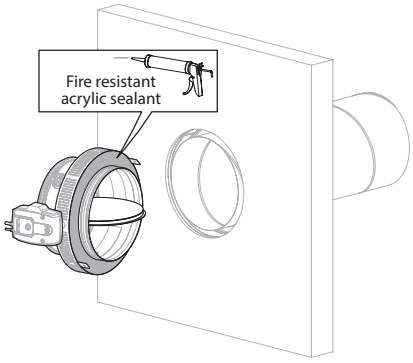

3

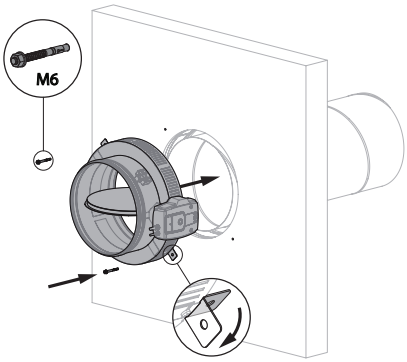

4

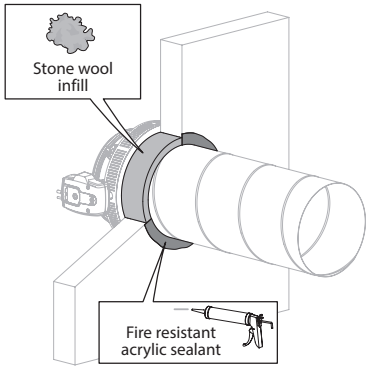

Installation in flexible wall (metal stud gypsum plasterboard wall) - sealing with acrylic sealant

1

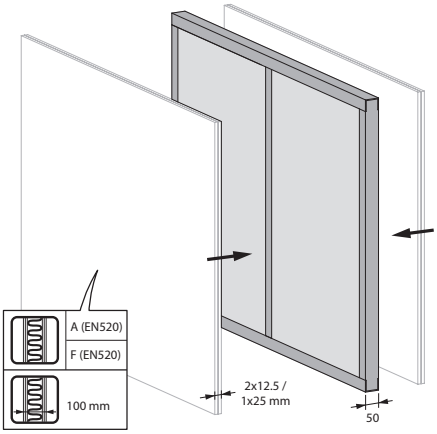

2

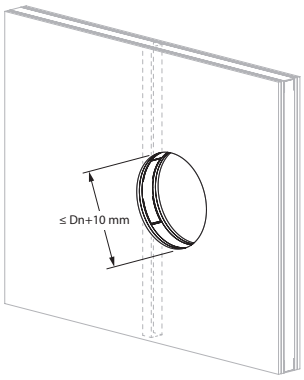

3

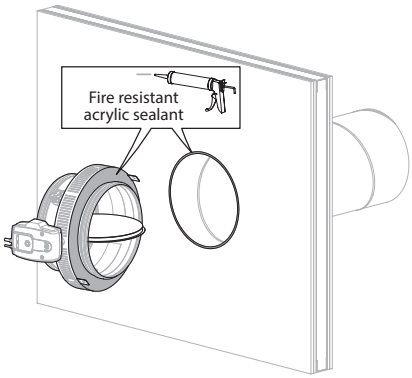

4

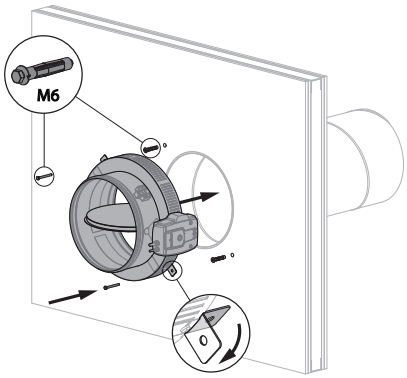

5

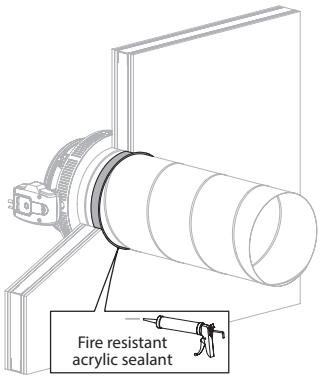

Installation in flexible wall (metal stud gypsum plasterboard wall) - sealing with stone wool

1

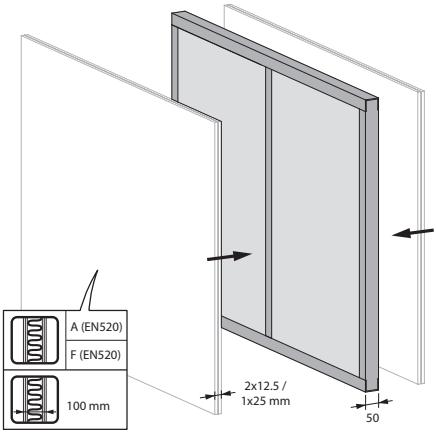

2

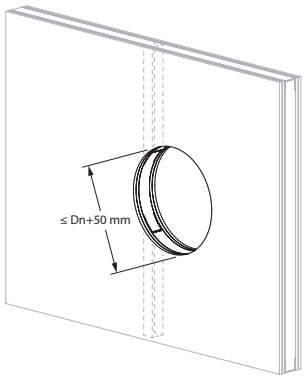

3

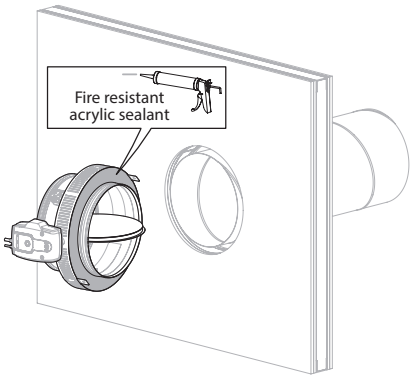

4

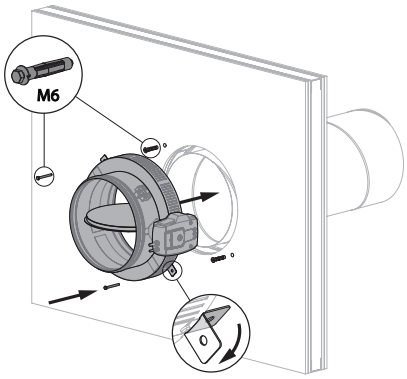

5

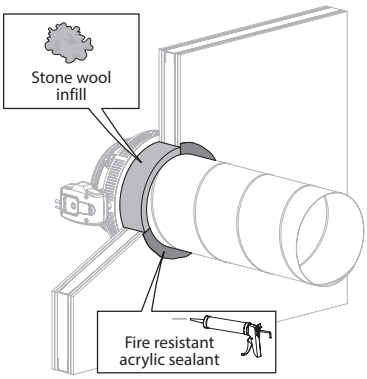

Installation in shaft wall

1

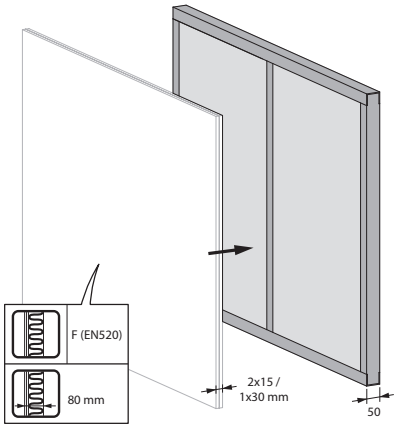

2

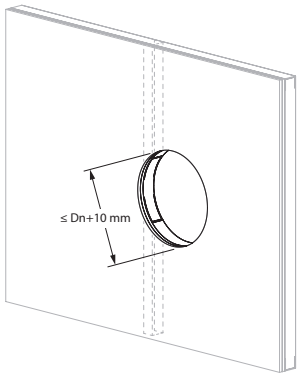

3

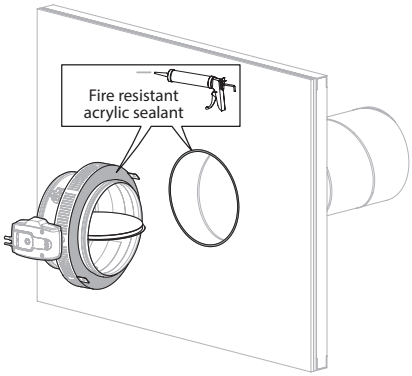

4

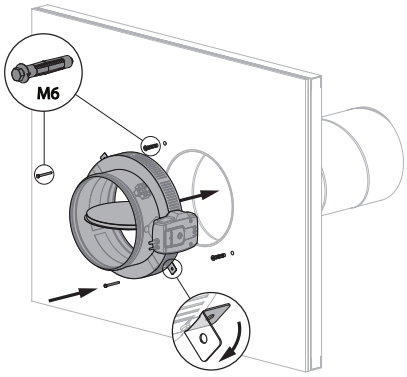

Installation in rigid floor - sealing with acrylic sealant

1

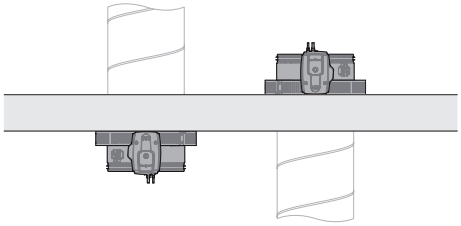

2

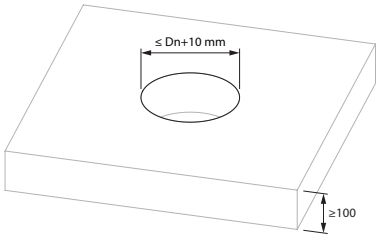

3

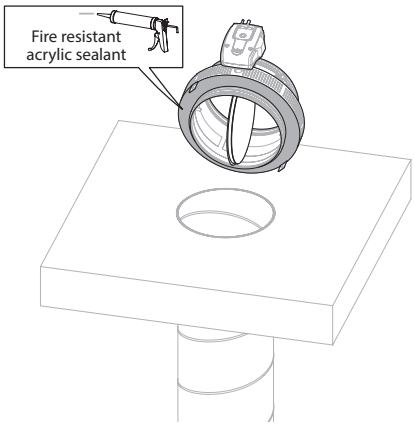

4

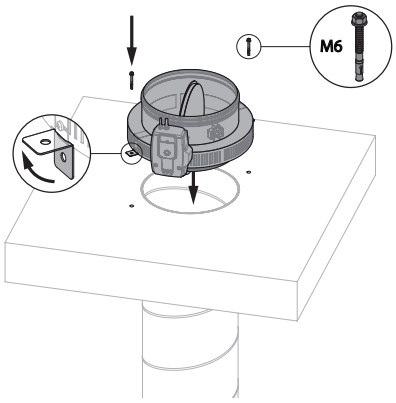

5

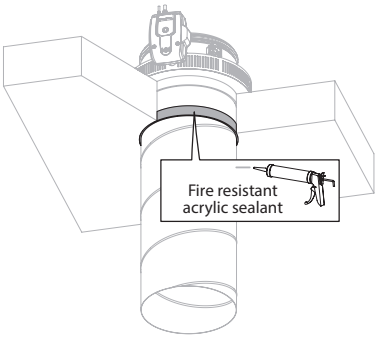

Installation in rigid floor - sealing with stone wool

1

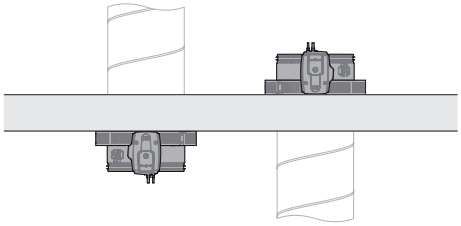

2

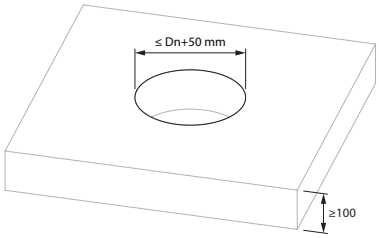

3

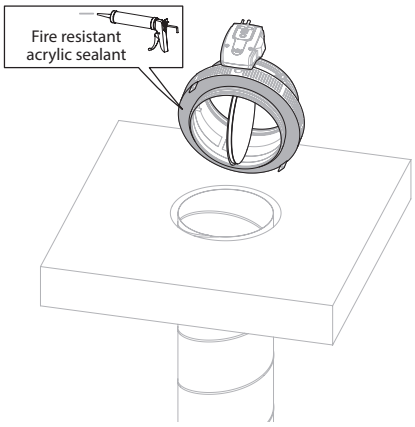

4

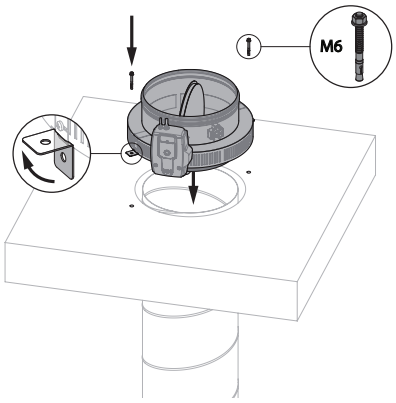

5

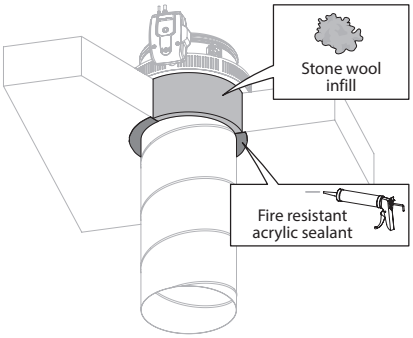

Installation remote from a rigid wall - sealing with acrylic sealant

1

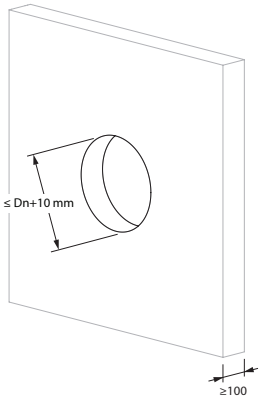

2

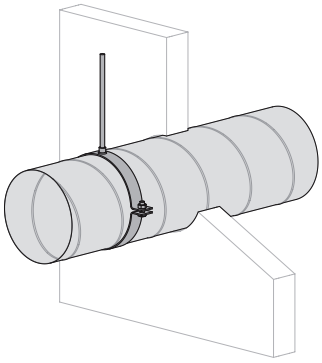

2. Provide suspension where necessary in accordance with the instructions of the duct manufacturer.

3

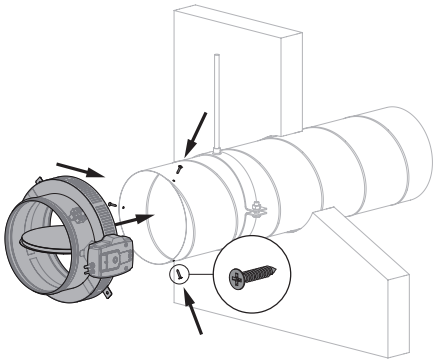

3. Attention: Make sure that the movement of the damper blade is not impeded by the screws.

4

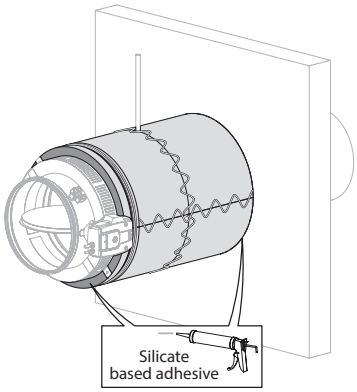

4. Apply the insulation in accordance with the manufacturer's instructions.

5

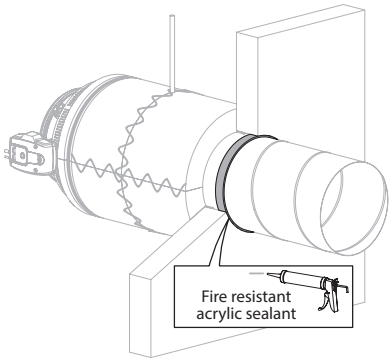

Installation remote from a rigid wall - sealing with stone wool

1

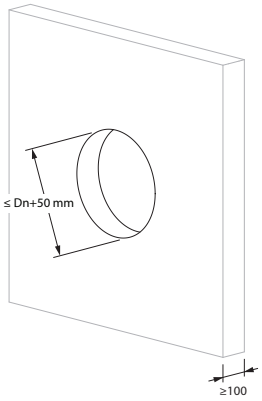

2

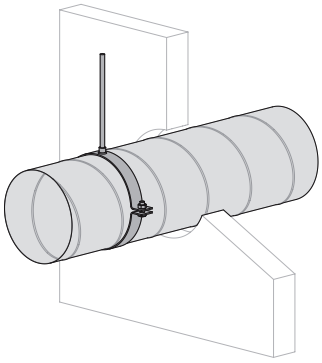

2. Provide suspension where necessary in accordance with the instructions of the duct manufacturer.

3

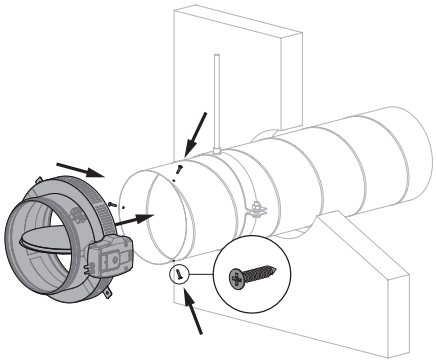

3. Attention: Make sure that the movement of the damper blade is not impeded by the screws.

4

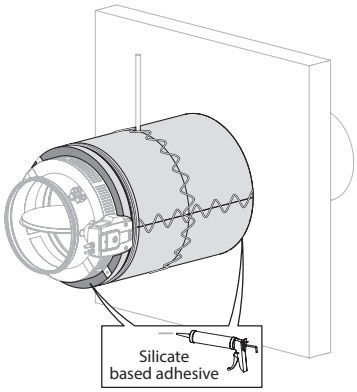

4. Apply the insulation in accordance with the manufacturer's instructions.

5

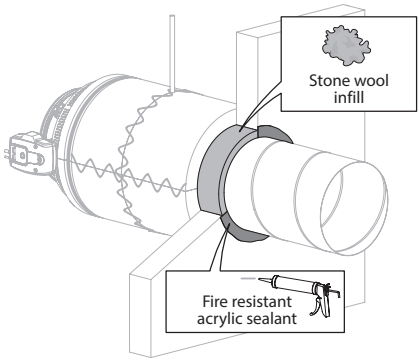

Installation remote from a flexible wall - sealing with acrylic sealant

1

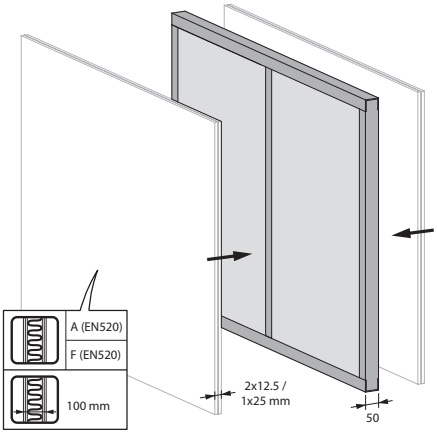

2

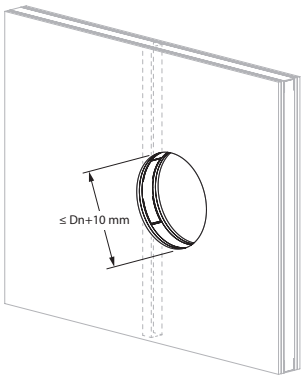

3

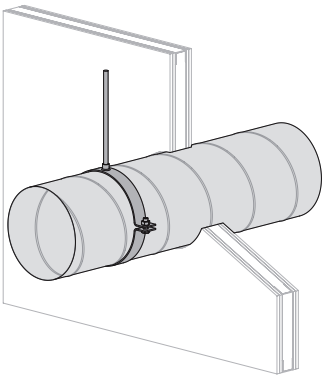

4

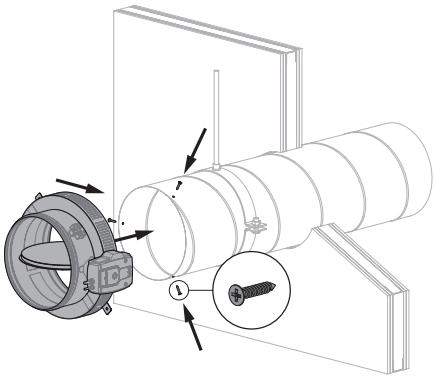

3. Provide suspension where necessary in accordance with the instructions of the duct manufacturer.

4. Attention: Make sure that the movement of the damper blade is not impeded by the screws.

5

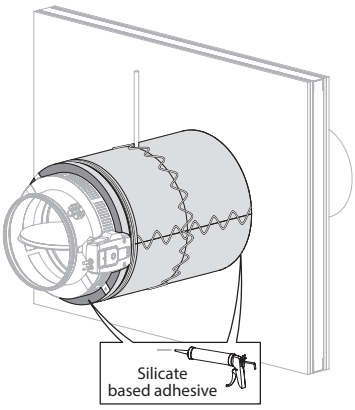

6

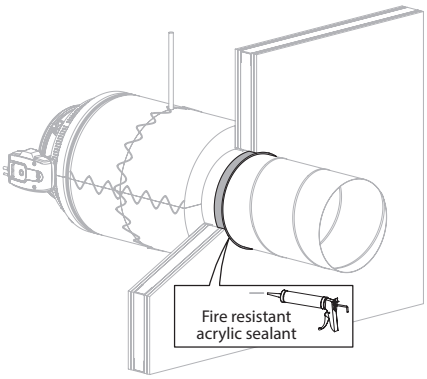

5. Apply the insulation in accordance with the manufacturer's instructions.

Installation remote from a flexible wall - sealing with stone wool

1

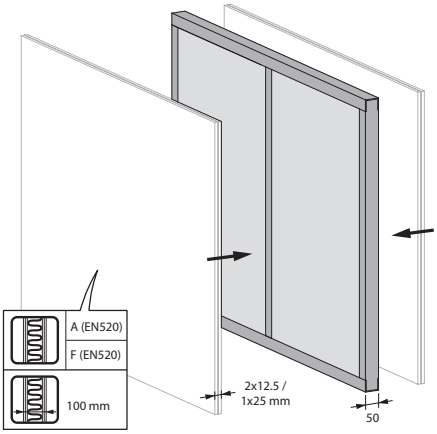

2

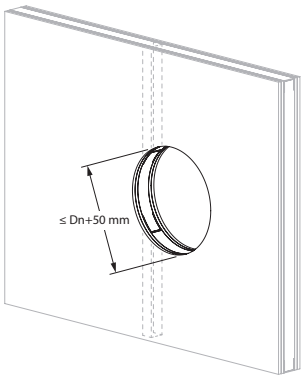

3

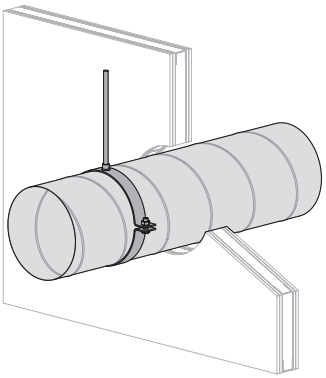

4

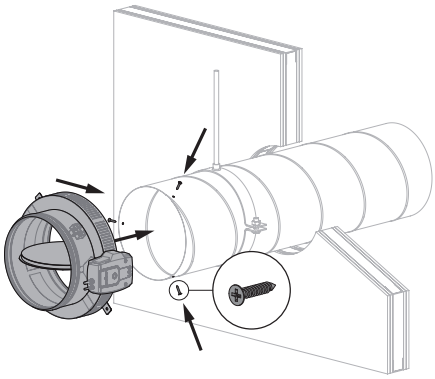

3. Provide suspension where necessary in accordance with the instructions of the duct manufacturer.

4. Attention: Make sure that the movement of the damper blade is not impeded by the screws.

5

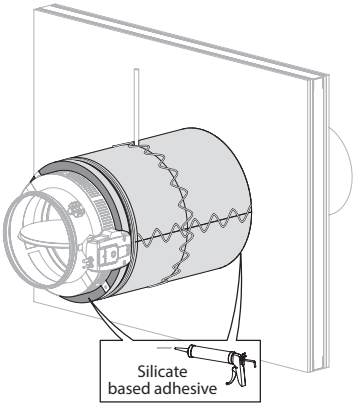

6

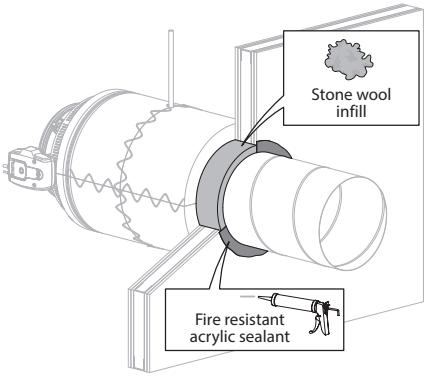

5. Apply the insulation in accordance with the manufacturer's instructions.

Installation remote from a shaft wall

1

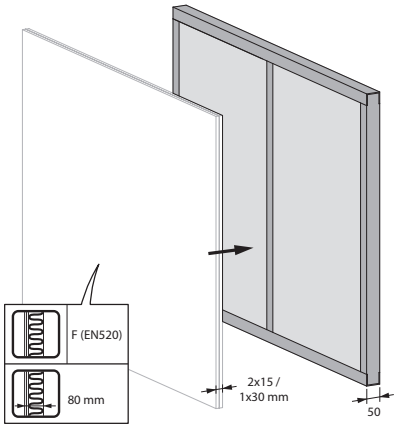

2

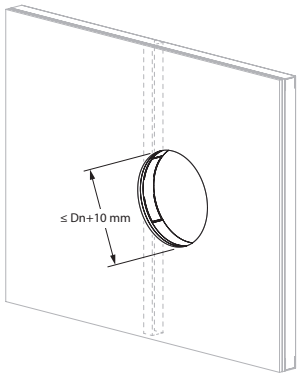

3

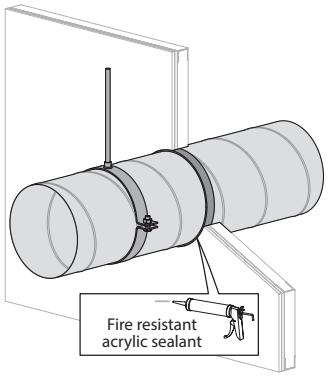

4

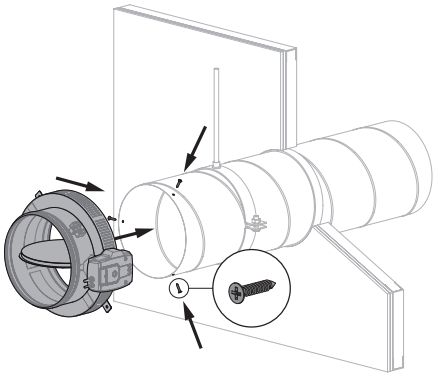

3. Provide suspension where necessary in accordance with the instructions of the duct manufacturer.

4. Attention: Make sure that the movement of the damper blade is not impeded by the screws.

5

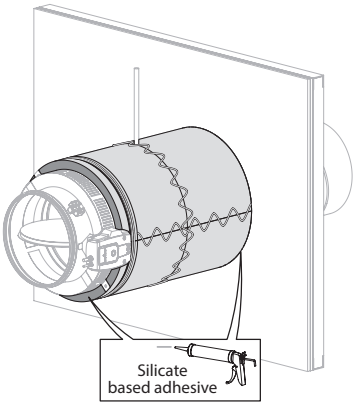

5. Apply the insulation in accordance with the manufacturer's instructions.

Installation remote from a floor - sealing with acrylic sealant

1

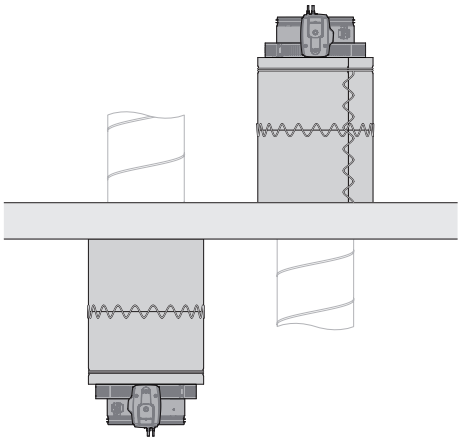

2

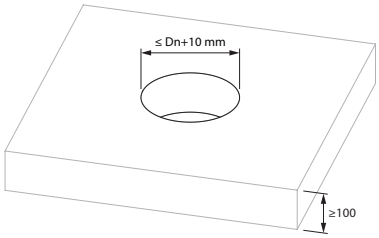

3

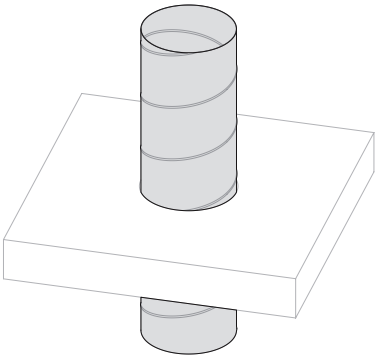

4

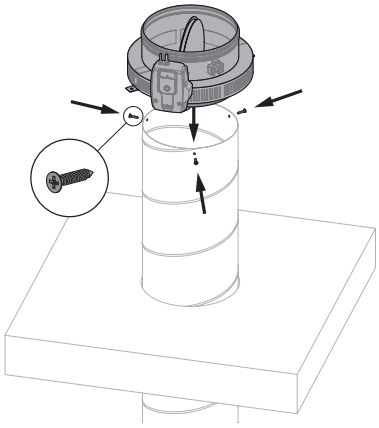

4. Attention: Make sure that the movement of the damper blade is not impeded by the screws.

5

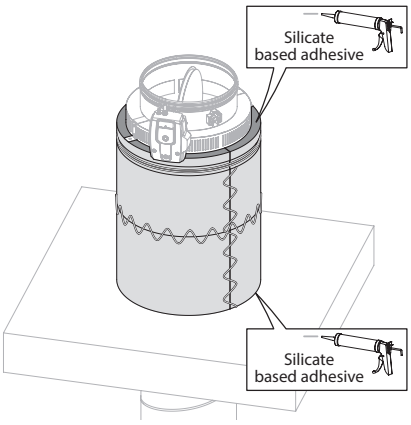

5. Apply the insulation in accordance with the manufacturer's instructions.

6

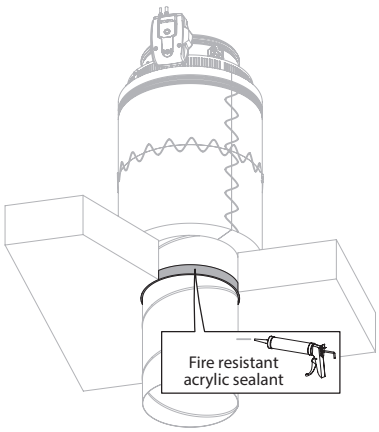

Installation remote from a floor - sealing with stone wool

1

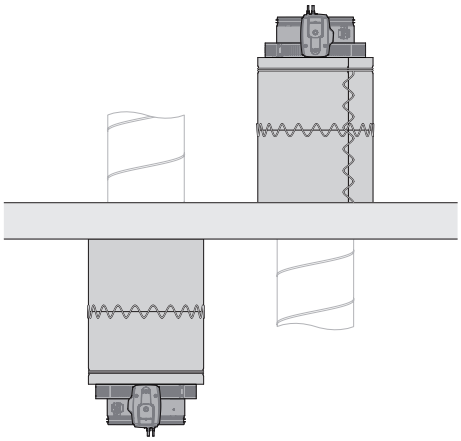

2

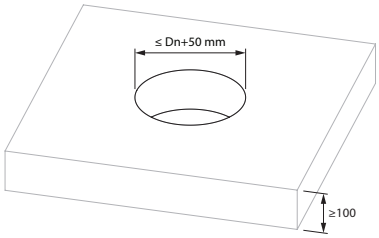

3

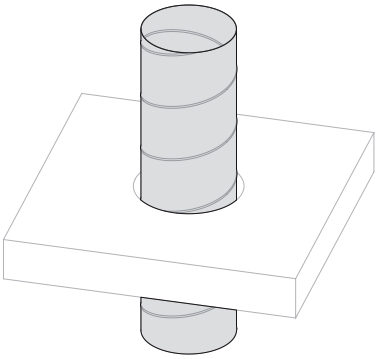

4

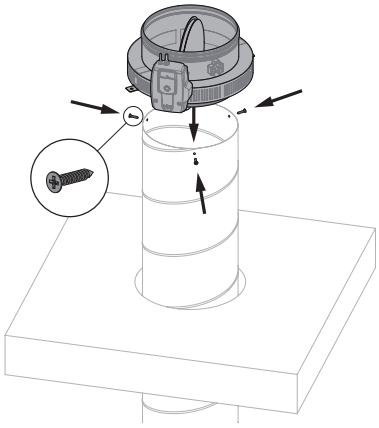

4. Attention: Make sure that the movement of the damper blade is not impeded by the screws.

5

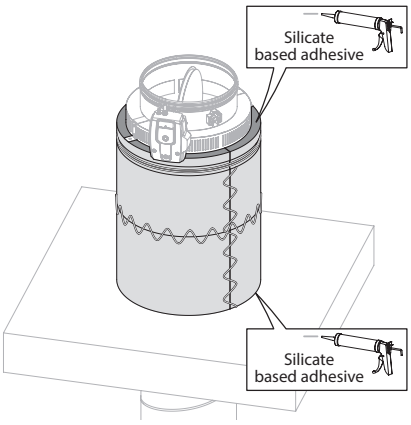

5. Apply the insulation in accordance with the manufacturer's instructions.

6

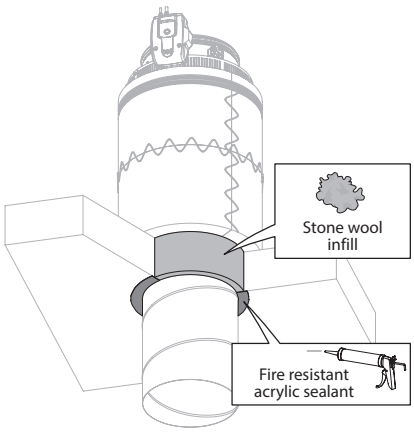

Maintenance

- No specific maintenance required.
- Schedule at least 2 visual checks each year.
- Remove dust and all other particles before use.
- Follow local maintenance regulations (i.e. BS9999 Annex V; NF S 61-933) and EN13306.
- Read the maintenance instructions on our website: https://www.rft.eu/assets//PIM/DOCUMENTS/BROCHURE%20KITS/BRO_K139_MAINTENANCE_C.pdf
- Use the damper at up to 95% humidity, non-condensing.
- The fire damper can be cleaned with a dry or slightly damp cloth. It is forbidden to use abrasive cleaners or mechanical cleaning techniques (brush).

Operation and mechanisms

ONE Spring return actuator for remote control

The spring-return actuator ONE is designed to easily operate Rf-t fire dampers of all sizes, automatically or remotely. Five models are available, 24 or 230 volt, with FDCU or FDCB position switches; and 24 volt with plug (ST).

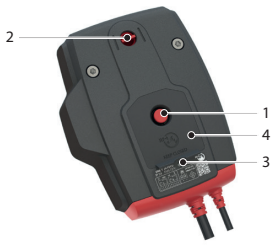

1. unlocking button
2. blade position indicator
3. LED
4. battery compartment to reset motor
5. plug (ST)

Unlocking

- **manual unlocking**: shortly press the unlocking button (1) once.
- **automatic unlocking**: the fusible link reacts as soon as the temperature in the duct reaches 72°C.
- **remote unlocking**: by interrupting the power supply.

Resetting

- **manual resetting**: open the battery compartment (4) and press a 9V battery against the contact springs. Hold this position until the LED (3) emits a continuous light. Check whether the indicator (2) shows that the damper blade is in the open position. Remove the battery, the LED fades away. Close the battery compartment.
- **motorised resetting**: switch off the power supply for at least 5 sec. Power the actuator (respect the prescribed voltage) for at least 75 sec. The resetting stops automatically when the end of range is reached (damper open).

Caution:

- ⚠ If the LED (3) flickers fast (3x/sec.), the battery is discharged: use a new battery.
- ⚠ If the LED (3) flickers slowly (1x/sec), the resetting is in progress.
- ⚠ If the LED (3) is continuously on, the resetting is complete and the motor is powered.
- ⚠ If the actuator detects voltage on the power cable, a brief contact of the battery is enough to start the resetting process.
- ⚠ The power supply of this actuator cannot be individually replaced. If the cable is damaged, the whole unit must be discarded and replaced.
- ⚠ The housing of the mechanism contains a temperature sensor. When the temperature in the housing exceeds 72°C, the mechanism unlocks. The LED flashes twice per second. When the temperature drops below 72°C, the mechanism can only be reset in a motorised manner after a manual reset (with a battery).
- ⚠ The end of range switches need 1 second after operation to adopt a stable position.
- ⚠ Make sure the thermal trigger device is present in the actuator. The actuator might not function properly if this is not the case.

BFL(T) Remotely controlled spring return actuator

The spring return actuator BFL(T) is especially designed to operate fire dampers remotely. The BFL(T) variant is intended for fire dampers with smaller dimensions (CR60, CR120, CR2 with ø ≤ 400 mm, CRS60 with ø ≤ 315 mm, CU2 / CU2-15 / CU4 with B+H ≤ 1200 mm or for CU-LT and CU-LT-1s). For Markage FD with H = 200 mm or H = 2200 mm (in combination with BFT motor).

1. locking button
2. plug (ST)
3. access for manual resetting
4. thermo-electric tripping device (T)

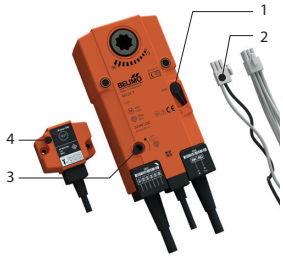

Options - at the time of order

SN2 BFL/BFN Auxiliary limit switch 'open/closed'

Unlocking

- **manual unlocking**: place the locking button on "unlock". (In case of BFLT: the damper can alternatively be unlocked by pushing the "test" button on the thermo-electric fuse)
- **automatic unlocking**: the thermo-electric fuse reacts as soon as the temperature reaches 72°C (type BFLT).
- **remote unlocking**: by interrupting the power supply.

Caution:

⚠ The thermo-electric fuse will not move the damper into its safety position (when the temperature reaches 72°C) if the motor is not powered.

Resetting

- **manual resetting**: turn the enclosed handle anti-clockwise. To block the motor, place the locking button on "lock"
- **motorised resetting**: switch off the power supply for at least 10 seconds. Supply the actuator (respect the prescribed voltage) for at least 75 seconds. The resetting stops automatically when the end of range is reached (damper open) - it takes about 60 seconds to reset the damper - or when the power supply is interrupted.

Caution:

⚠ Do not use a drill or powered screwdriver.
⚠ Stop as soon as the motor is completely rearmed (end of range).

BFN(T) Remotely controlled spring return actuator

The spring return actuator BFN(T) is especially designed to operate fire dampers remotely. The BFN(T) variant is intended for fire dampers with large dimensions (CRE60, CR2 with ø > 400 mm, CRS60 with ø > 315 mm or CU2, CU2-15, CU4 with B+H > 1200 mm. For Markage FD with H of 400 and 600 mm or with H = 1200 mm (2 pcs) and with H = 2400 mm (in combination with BFT motor).

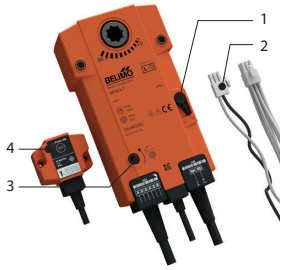

1. locking button
2. plug (ST)
3. access for manual resetting
4. thermo-electric tripping device (T)

Options - at the time of order

SN2 BFL/BFN Auxiliary limit switch 'open/closed'

Unlocking

- **manual unlocking**: place the locking button on "unlock". (In case of BFNT: the damper can alternatively be unlocked by pushing the "test" button on the thermo-electric fuse)
- **automatic unlocking**: the thermo-electric fuse reacts as soon as the temperature reaches 72°C (type BFNT).
- **remote unlocking**: by interrupting the power supply.

Caution:

- ⚠ The thermo-electric fuse will not move the damper into its safety position (when the temperature reaches 72°C) if the motor is not powered.

Resetting

- **manual resetting**: turn the enclosed handle anti-clockwise. To block the motor, place the locking button on "lock"
- **motorised resetting**: switch off the power supply for at least 10 seconds. Supply the actuator (respect the prescribed voltage) for at least 75 seconds. The resetting stops automatically when the end of range is reached (damper open) - it takes about 60 seconds to reset the damper - or when the power supply is interrupted.

Caution:

- ⚠ Do not use a drill or powered screwdriver.
- ⚠ Stop as soon as the motor is completely rearmed (end of range).
- ⚠ The mechanism may never be tested on its own, without being attached to the damper. Such a test might damage the mechanism or the operator might be injured.

Electrical connection

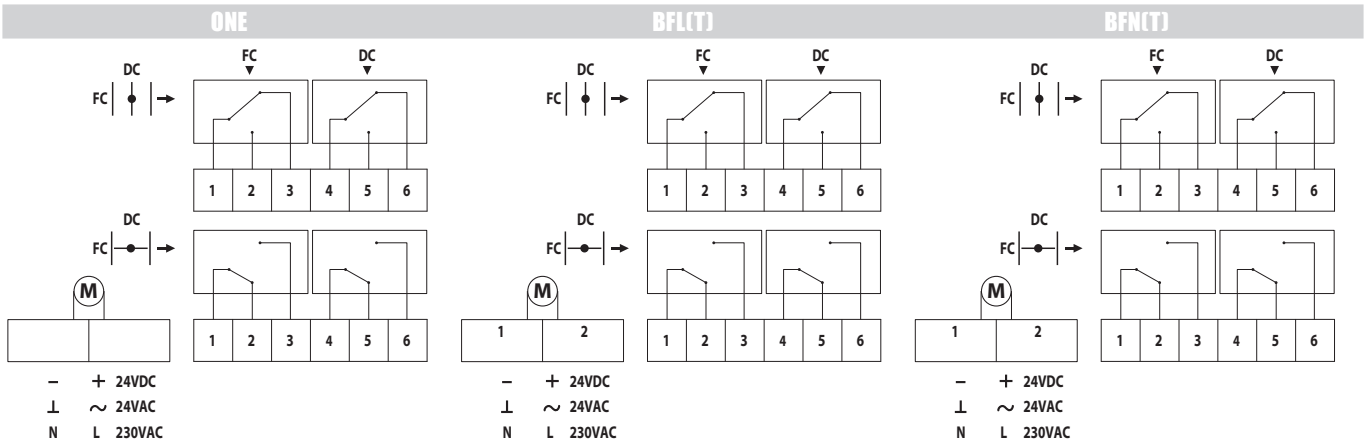

MEC	Nominal voltage motor	Nominal voltage magnet	Power consumption (stand-by)	Power consumption (operating)	Standard switches	Resetting time motor
ONE T 24 FDCU L	24 V AC/DC (-10/+20%)	N/A	0,28 W	4,2W	1mA...1A 60V	< 75 s (cabled) / <85 s (battery)
ONE T 230 FDCU L	230 V AC (-15/+15%)	N/A	0,57 W	4,2W	1mA...100mA 230V	< 75 s (cabled) / <85 s (battery)
BFLT24	24 V AC/DC	N/A	0,8 W	2,5 W	1mA...3A, AC 250V	< 60 s
BFLT24-ST	24 V AC/DC	N/A	0,8 W	2,5 W	1mA...3A, AC 250V	< 60 s
BFLT230	230 V AC	N/A	1,4 W	4 W	1mA...3A, AC 250V	< 60 s
BFLT230-ST	230 V AC	N/A	1,4 W	4 W	1mA...3A, AC 250V	< 60 s
BFNT24	24 V AC/DC	N/A	1,1 W	4 W	1mA...3A, AC 250V	< 60 s
BFNT24-ST	24 V AC/DC	N/A	1,1 W	4 W	1mA...3A, AC 250V	< 60 s
BFNT230	230 V AC	N/A	1,8 W	5,5 W	1mA...3A, AC 250V	< 60 s
BFNT230-ST	230 V AC	N/A	1,8 W	5,5 W	1mA...3A, AC 250V	< 60 s

MEC	Running time spring	Noise level motor	Noise level spring	Cable supply / control	Cable auxiliary switch	Protection class
ONE T 24 FDCU L	< 30 s	< 64 dB (A)	< 67 dB (A)	1 m, 2 x 0.75 mm^2 (halogen-free)	1 m, 6 x 0.75 mm^2 (halogen-free)	IP 54
ONE T 230 FDCU L	< 30 s	< 64 dB (A)	< 67 dB (A)	1 m, 2 x 0.75 mm^2 (halogen-free)	1 m, 6 x 0.75 mm^2 (halogen-free)	IP 54
BFLT24	20 s	< 43 dB (A)	< 62 dB (A)	1 m, 2 x 0.75 mm^2 (halogen-free)	1 m, 6 x 0.75 mm^2 (halogen-free)	IP 54
BFLT24-ST	20 s	< 43 dB (A)	< 62 dB (A)	1 m, 2 x 0.75 mm^2 (halogen-free)	1 m, 6 x 0.75 mm^2 (halogen-free)	IP 54
BFLT230	20 s	< 43 dB (A)	< 62 dB (A)	1 m, 2 x 0.75 mm^2 (halogen-free)	1 m, 6 x 0.75 mm^2 (halogen-free)	IP 54
BFLT230-ST	20 s	< 43 dB (A)	< 62 dB (A)	1 m, 2 x 0.75 mm^2 (halogen-free)	1 m, 6 x 0.75 mm^2 (halogen-free)	IP 54
BFNT24	20 s	≤ 55 dB (A)	ca. 70 dB (A)	1 m, 2 x 0.75 mm^2 (halogen-free)	1 m, 6 x 0.75 mm^2 (halogen-free)	IP 54
BFNT24-ST	20 s	≤ 55 dB (A)	ca. 70 dB (A)	1 m, 2 x 0.75 mm^2 (halogen-free)	1 m, 6 x 0.75 mm^2 (halogen-free)	IP 54
BFNT230	20 s	≤ 55 dB (A)	ca. 70 dB (A)	1 m, 2 x 0.75 mm^2 (halogen-free)	1 m, 6 x 0.75 mm^2 (halogen-free)	IP 54
BFNT230-ST	20 s	≤ 55 dB (A)	ca. 70 dB (A)	1 m, 2 x 0.75 mm^2 (halogen-free)	1 m, 6 x 0.75 mm^2 (halogen-free)	IP 54

Weights

CRS60 + ONE T 24 FDCU L

ØDn [mm]	100	125	160	200	250	315	400	500	630
kg	4,1	4,5	5,1	5,8	7,1	8,6	14,1	14,3	20,1

CRS60 + ONE T 230 FDCU L

ØDn [mm]	100	125	160	200	250	315	400	500	630
kg	4,1	4,5	5,1	5,8	7,1	8,6	14,1	14,3	20,1

CRS60 + BFLT24

ØDn [mm]	100	125	160	200	250	315	400	500	630
kg	3,7	4,1	4,7	5,4	6,7	8,2	-	-	-

CRS60 + BFLT24-ST

ØDn [mm]	100	125	160	200	250	315	400	500	630
kg	3,7	4,1	4,7	5,4	6,7	8,2	-	-	-

CRS60 + BFLT230

ØDn [mm]	100	125	160	200	250	315	400	500	630
kg	3,7	4,1	4,7	5,4	6,7	8,2	-	-	-

CRS60 + BFLT230-ST

ØDn [mm]	100	125	160	200	250	315	400	500	630
kg	3,7	4,1	4,7	5,4	6,7	8,2	-	-	-

CRS60 + BFNT24

ØDn [mm]	100	125	160	200	250	315	400	500	630
kg	-	-	-	-	-	-	14,0	14,2	20,0

CRS60 + BFNT24-ST

ØDn [mm]	100	125	160	200	250	315	400	500	630
kg	-	-	-	-	-	-	14,0	14,2	20,0

CRS60 + BFNT230

ØDn [mm]	100	125	160	200	250	315	400	500	630
kg	-	-	-	-	-	-	14,0	14,2	20,0

CRS60 + BFNT230-ST

ØDn [mm]	100	125	160	200	250	315	400	500	630
kg	-	-	-	-	-	-	14,0	14,2	20,0

Selection data

$$\Delta p\ (Pa) = 0{,}6 \times v^2 \times \zeta$$

ØDn [mm]	100	125	160	200	250	315	400	500	630
ζ [-]	0,7610	0,5715	0,4248	0,3425	0,2680	0,2165	0,2147	0,1913	0,1693

CRS60 - A-weighted sound power level in the duct

ØDn [mm]	100	125	160	200	250	315	400	500	630	
Sn [m²]	0,0061	0,0101	0,0174	0,0281	0,0450	0,0728	0,1136	0,1813	0,2927	
Sn [%]	77,00	82,00	86,00	89,00	92,00	93,00	90,00	92,00	94,00	
Q [m³/h]	344,16	652,52	1.160,29	1.850,40	2.664,86	4.107,60	5.439,33	8.069,47	11.004,54	**60 dB**
Δp [Pa]	67,65	74,80	65,50	55,01	36,57	27,85	18,62	14,96	9,77	
Q [m³/h]	225,36	428,97	775,21	1.227,60	1.846,66	2.898,00	3.966,52	5.793,47	7.910,05	**50 dB**
Δp [Pa]	29,01	32,33	29,24	24,21	17,56	13,86	9,90	7,71	5,05	
Q [m³/h]	147,60	278,76	406,67	813,60	1.292,49	2.044,80	2.799,16	4.118,16	5.685,83	**40 dB**
Δp [Pa]	12,44	13,65	8,05	10,63	8,60	6,90	4,93	3,90	2,61	
Q [m³/h]	96,48	176,71	337,30	540,00	897,71	1.433,60	1.945,61	2.850,01	5.044,50	**30 dB**
Δp [Pa]	5,32	5,49	5,54	4,68	4,15	3,39	2,38	1,87	2,05	

Every air flow lower than the above mentioned maximum value, will meet the listed A-weighted sound power level for the respective dimension.

Correction factor ΔL

To obtain the sound power level for the octave midband: LW oct = ΔL + Lwa

m/s \ [Hz]	63	125	250	500	1000	2000	4000	8000
2-4	15,00	5,33	0,67	-2,67	-7,00	-11,33	-13,33	-12,33
6-8	13,65	5,65	1,90	-2,73	-7,98	-11,23	-14,10	-16,35
10-12	11,08	4,88	1,68	-2,92	-6,72	-8,72	-13,32	-19,52

Sample order

CRS60 250 ONE T 24 FDCU L

1 2 3

1. product
2. diameter
3. mechanism type

Approvals and certificates

All our dampers are submitted to a number of tests by official test institutes. Reports of these tests form the basis for the approvals of our dampers.

CE 0749 requested

SP Certifiering requested

If the product is manipulated in any other way than described in this manual, Rf-Technologies will decline any responsibility and the guarantee will expire!